Vendo® Engineering V-Max *Set Up Guide*

Size: 20oz / 591ml **Rev. A** **Date 7/17/00**
Pkg. Description/Type: 20oz / 591ml Dr PEPPER TAPER NECK
Franchise: Dr Pepper **KIT# 1113228-7**

Column Setup

Cam Setting	Back Spacer	Neck Guide Locations	Gage Bar Clip Location	Gage Bar Location	Side Spacer	Sold Out Flap	Sold Out Spacer
2	16	Front Rt. & Left B,C Rear Rt. 13,14	A/#1	#1	N/A	Long	N/A

Note: To properly vend product the V-Max must have the columns set up as illustrated.

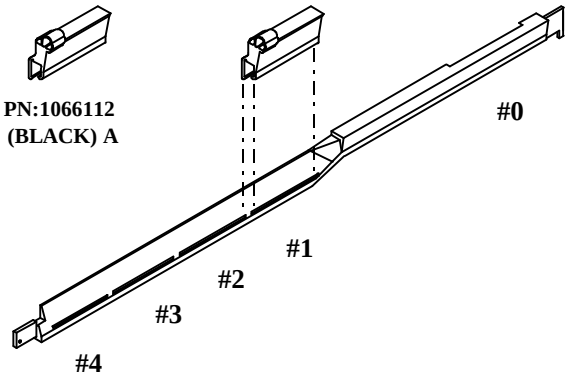

Gage Bar Clip Location

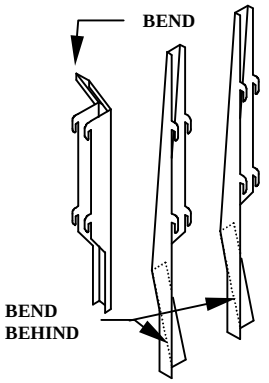

PN:1121027 Left Side. PN:1121026 Right Side.

Neck Guides

Set Up Guide

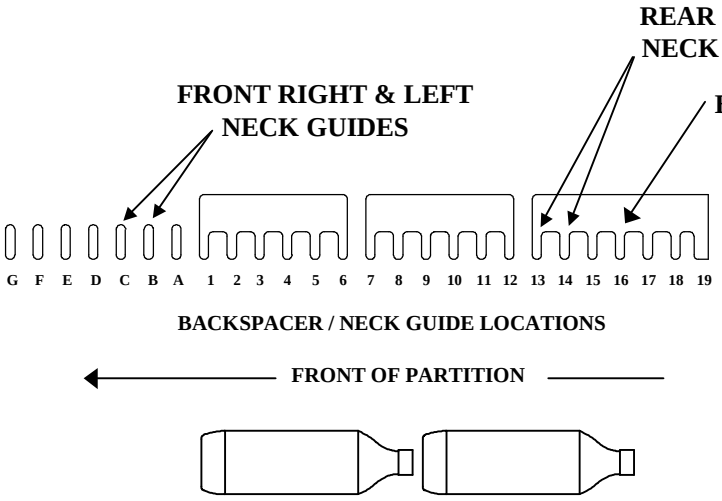

Note: Placement of bottle caps is to the back of the vendor

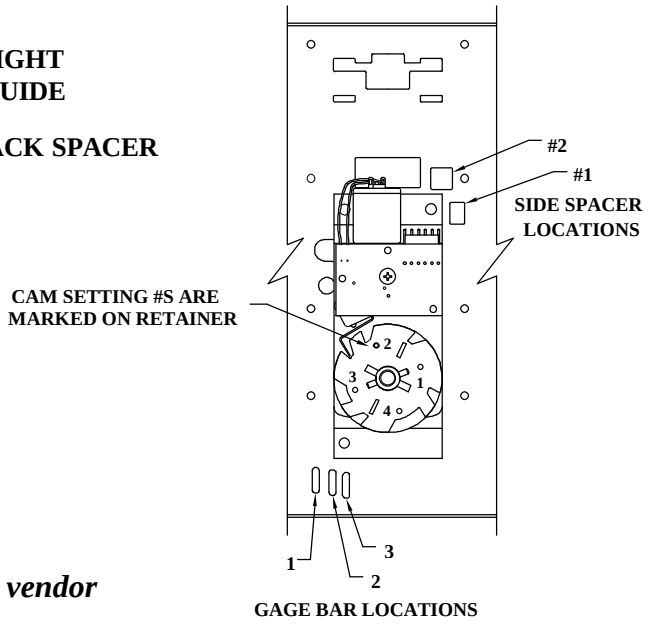

FOR OTHER PRODUCT SET-UP GUIDES, CONTACT THE VENDO COMPANY.
TEL: (559) 439-1770 FAX: (559) 439-2083.

Installation Instruction #1121936