Vendo® Engineering *V-Max* *Set Up Guide*

Size: 600ml / 20.3oz **Rev. B** **Date 7/10/03**
Pkg. Description/Type: 600ml / 20.3oz BARQ'S ROOTBEER TAPER NECK
Franchise: BARQ'S ROOTBEER **KIT# 1113228-7**

Column Setup

Cam Setting	Back Spacer	Neck Guide Locations	Gage Bar Clip Location	Gage Bar Location	Side Spacer	Sold Out Flap	Sold Out Spacer
2	17	Front Rt. & Left B,C Rear Right Side 13,14	A/#1	#1	N/A	Long	N/A

Note: To properly vend product the V-Max must have the columns set up as illustrated.

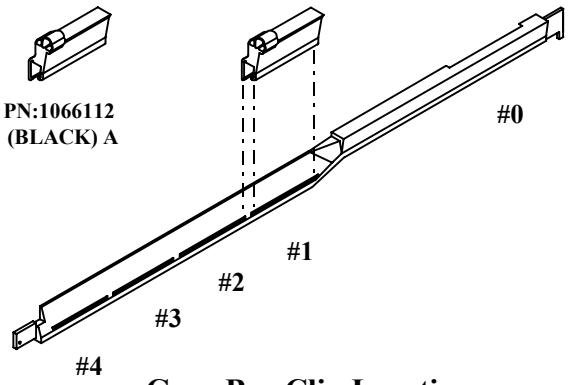

Gage Bar Clip Location

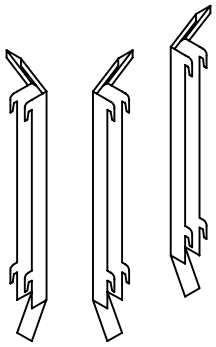

PN:1078899
Neck Guides

Set Up Guide

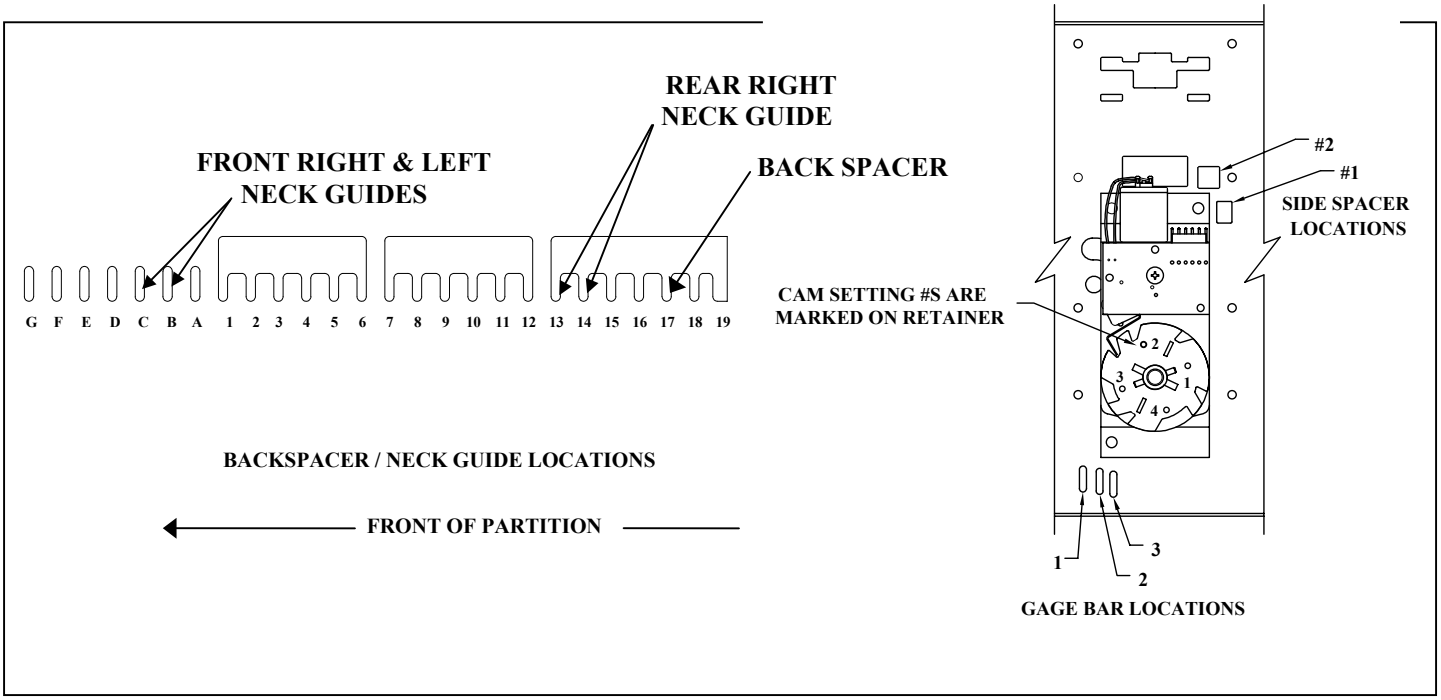

FOR OTHER PRODUCT SET-UP GUIDES, CONTACT THE VENDO COMPANY.
TEL: (209)439-1770 FAX: (209) 439-2083.

Installation Instruction #1121939